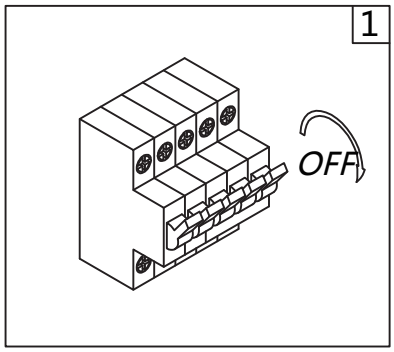
1
OFF

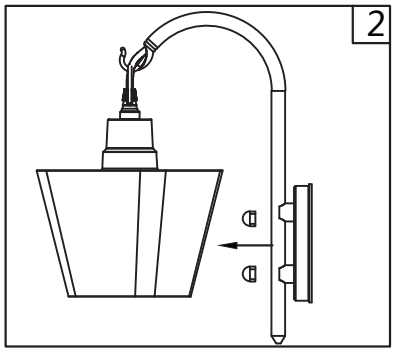
2

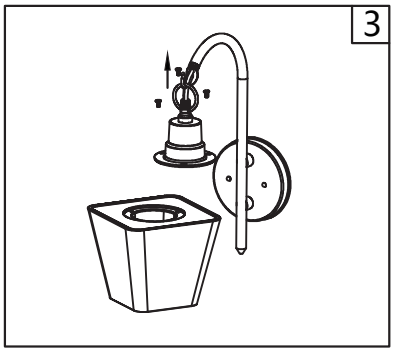
3

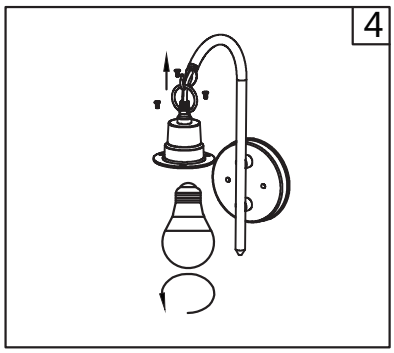
4

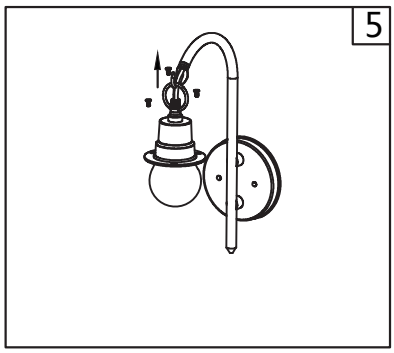
5

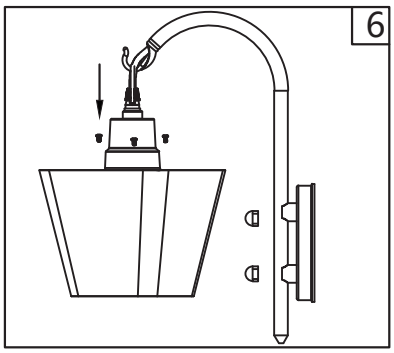
6

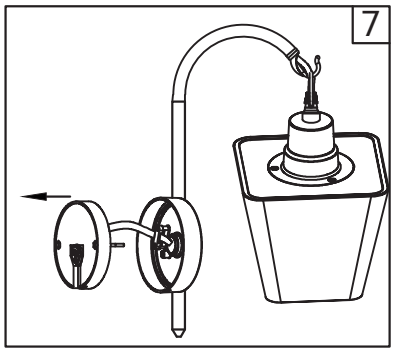
7

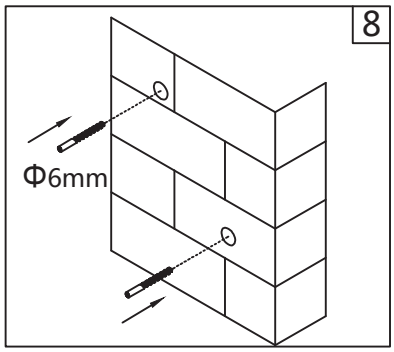
8
Φ6mm

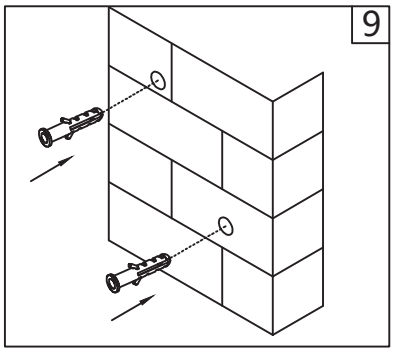
9

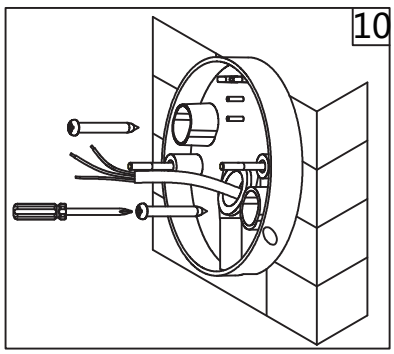
10

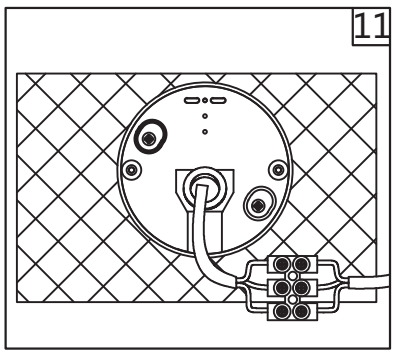
11

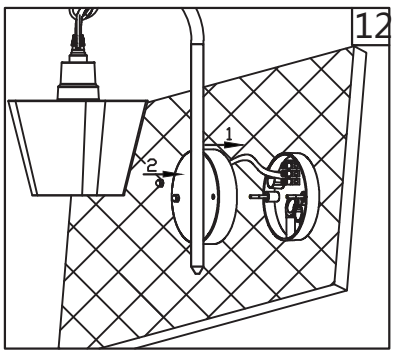
12
1
2

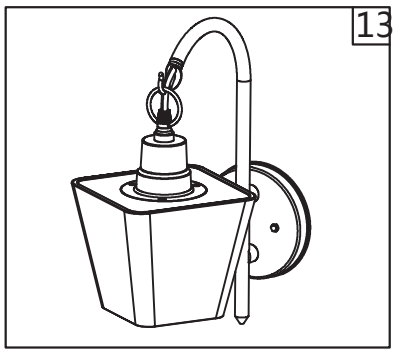
13

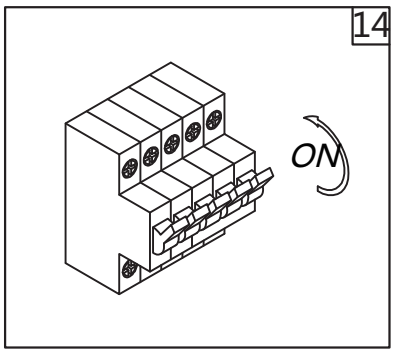
14
ON